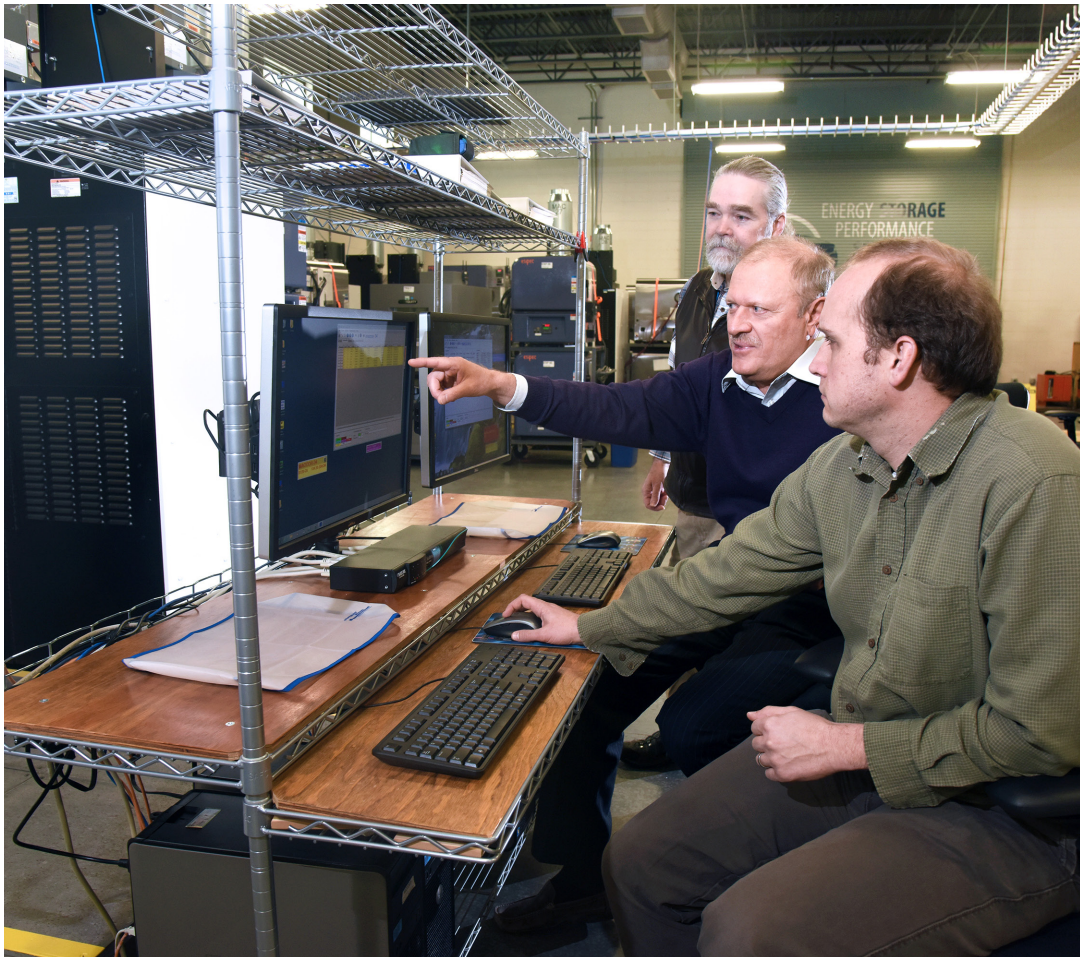

Eric Dufek, Sergiy Sazhin and Kevin Gering (front to back) examine a readout from lithium-ion batteries. Numbers for different metrics give the researchers precise data about a cell's behavior, particularly its state of health.

Battery Health Sentry

New metric prevents catastrophic failure by detecting internal shorts

Technological Marketing Summary

As energy storage devices become more important for managing the world's power supply, safeguarding large battery assemblies against catastrophic failure has become a top priority. Although lithium-ion batteries (LIBs) are found in a wide array of applications, from mobile phones to commercial airliners, the continued expansion of LIBs is hindered by safety, durability and reliability concerns.

One way of limiting catastrophic failures in LIB cells is to develop less volatile electrolytes, which can compromise cycle life, energy density and temperature range of performance. The other solution is to detect flaws and short circuits inside battery cells before they reach critical levels.

Research at Idaho National Laboratory is offering a new, fast metric — self-discharge (SD) current — as a way to detect shorts and assess battery safety. The method is noninvasive and applicable to any battery chemistry or design.

Technology Description

SD happens in all batteries when internal side reactions reduce the stored charge of the battery. Following a charging event, LIBs can self-discharge 1 to 2 percent each month. In cases where an internal short is present, the resulting SD is significantly higher and leads to excessive

Changing the World's Energy Future

Idaho National Laboratory

heat generation that in the worst-case scenarios results in catastrophic cell failure. Thus, a link between SD and state of health is essential for proper state-of-safety estimation.

Until now, measuring SD has taken days, but INL researchers have developed a new technique to enable fast SD determination and short-circuit detection. A cell at an arbitrary open-circuit voltage (OCV) is equilibrated with a DC voltage source that applies constant voltage slightly lower than the cell OCV. In a short time, electric current in the circuit eventually transforms to the current compensating for the cell SD, which can be precisely measured.

The patent-pending method is capable of detecting shorts caused by a variety of mechanisms. This information can be used to inform users of changes in battery pack health and isolate compromised cells.

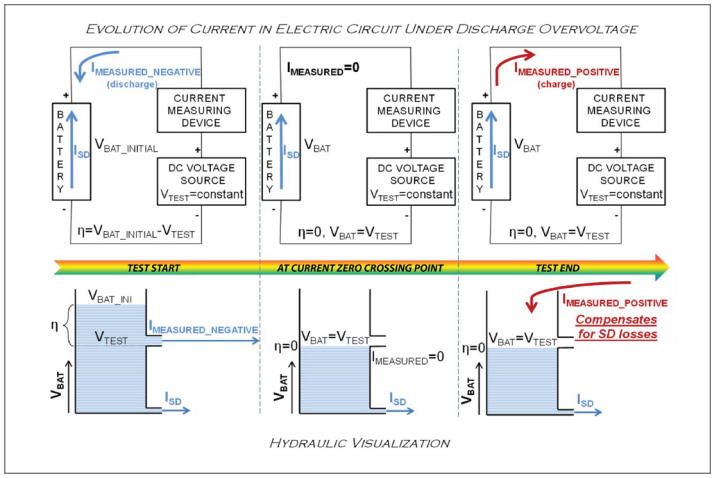

Schematic introduction of the method for a cell experiencing SD (self-discharge) or short circuit.

Technological Benefits

Fast and precise measurement:

- Ability to establish fast equilibration of the cell and keep it under control before determination of SD
- Detection of shorts far before catastrophic failure occurs
- Useful on cell, battery and pack levels

Potential Applications

Electric drive vehicles, stationary power utility storage, battery assemblies on naval vessels and aircraft, microgrid power storage at bases and data centers, quality control in battery production, first responders in electric-drive vehicle accidents, and batteries repurposed for secondary use are more potential applications.

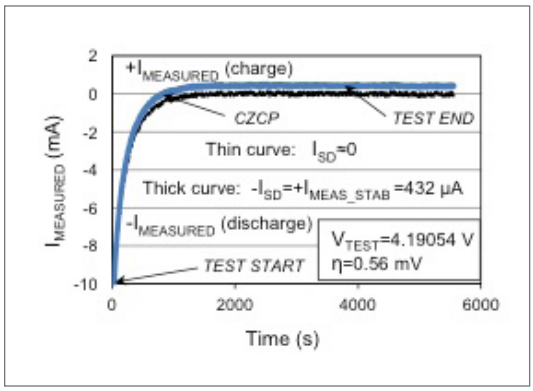

+I MEASURED-STABILIZED is compensating for self-discharge (SD) and is a measure of SD (thick curve). Close to zero stabilized current indicates a healthy cell with negligible SD (thin curve).

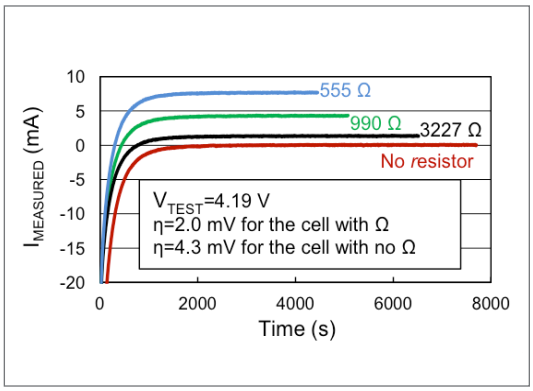

Different +I MEASURED-STABILIZED currents precisely correlate with short circuits of different resistivities.

For more information

Technical Contact
Sergiy V. Sazhin
208-526-4774
sergiy.sazhin@inl.gov

General Contact
Ryan Bills
208-526-1896
ryan.bills@inl.gov

www.inl.gov

A U.S. Department of Energy National Laboratory

Related Publication

S. V. Sazhin, E. J. Dufek, K. L. Gering, Enhancing Li-ion Battery Safety by Early Detection of Nascent Internal Shorts, ECS Transactions, 2016, v. 73 (1), p. 161-178.

17-50029-04_R12